Fermob

MO0037-f

Fermob

LOUISIANE

DESIGN STUDIO FERMOB

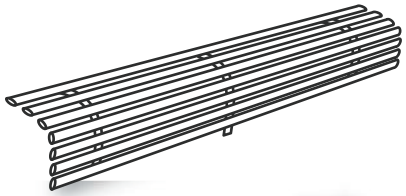

x 1

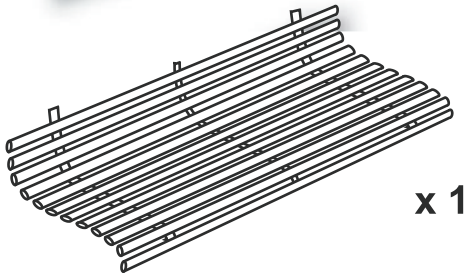

x 1

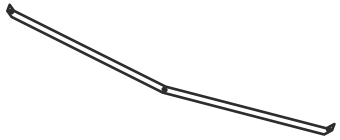

x 1

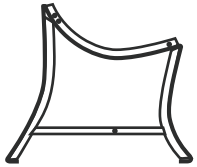

x 2

x 13

x 1

x 1

x 2

option / ref. 1003

1

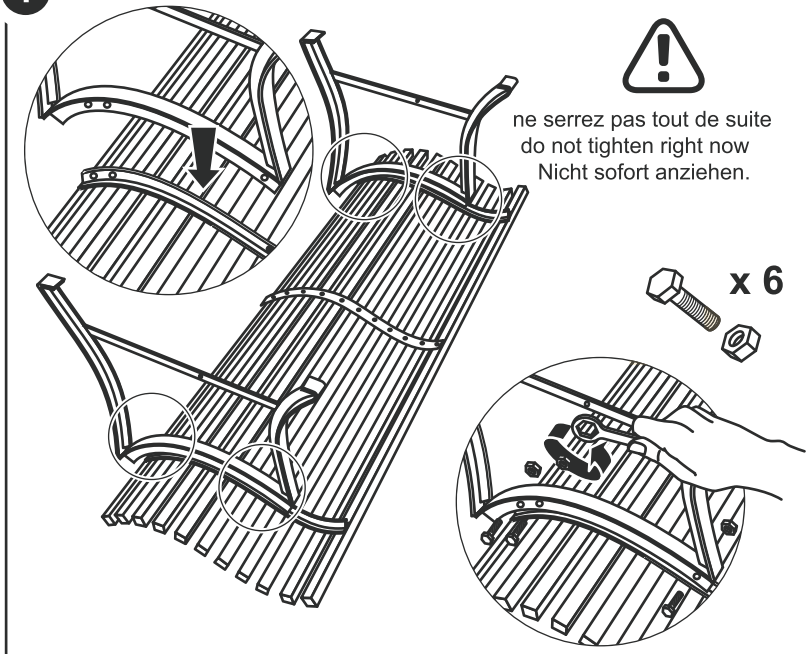

2

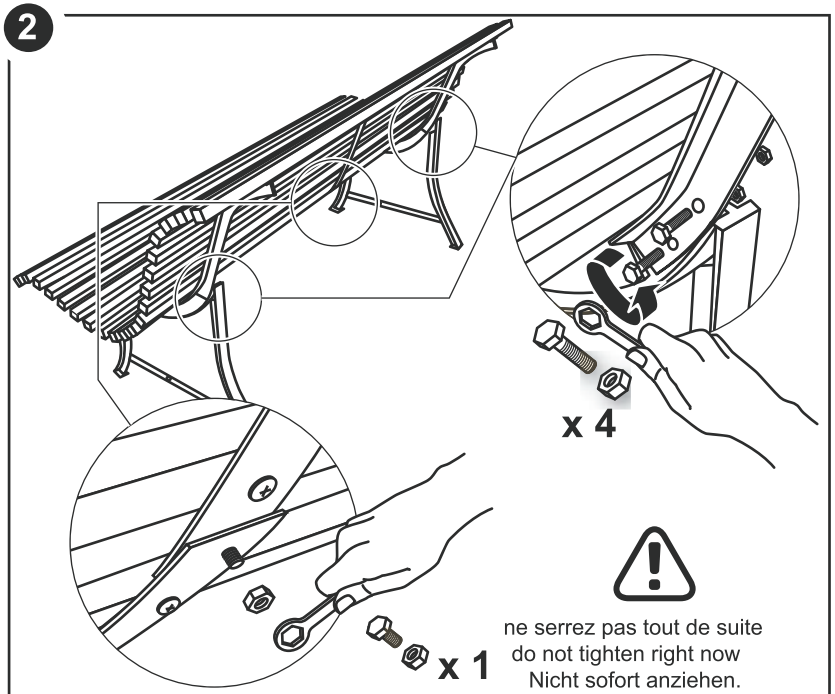

3

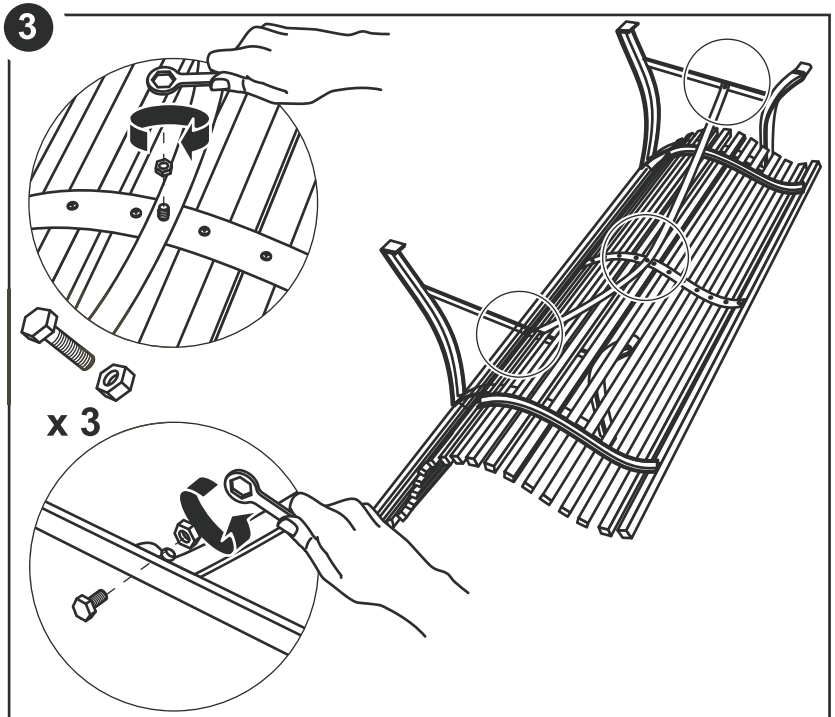
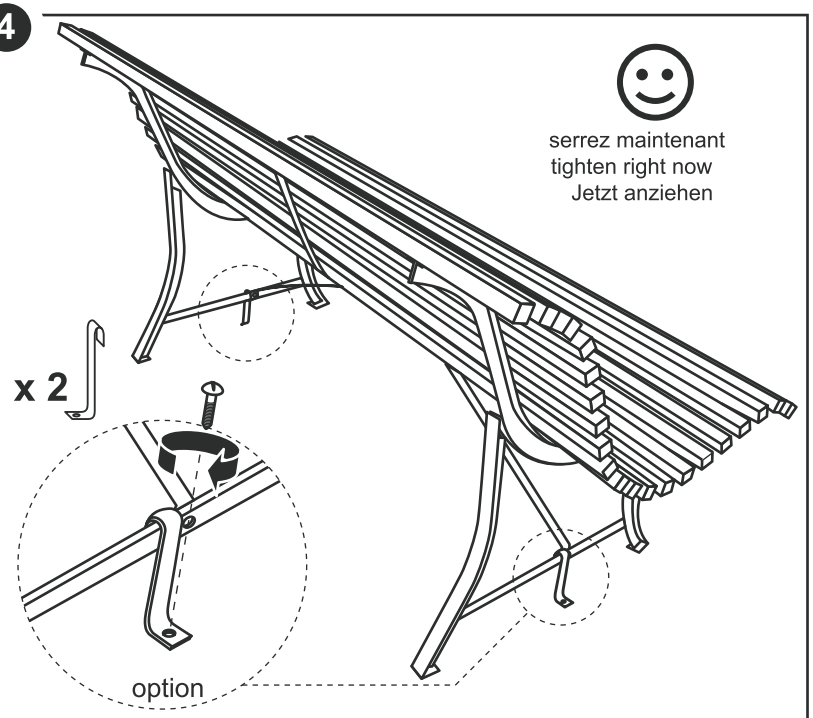
4